WP–330KTL-H1

Smart String Inverter



Max. Efficiency
≥99.0%

Smart Self Clean Fan

Smart DC Connector
Temperature Detect

Smart String Level
Disconnection

28 High Accuracy String
Current Detect

Support IV diagnosis

IP 66 protection

Surge Arresters for
DC & AC

Efficiency Curve

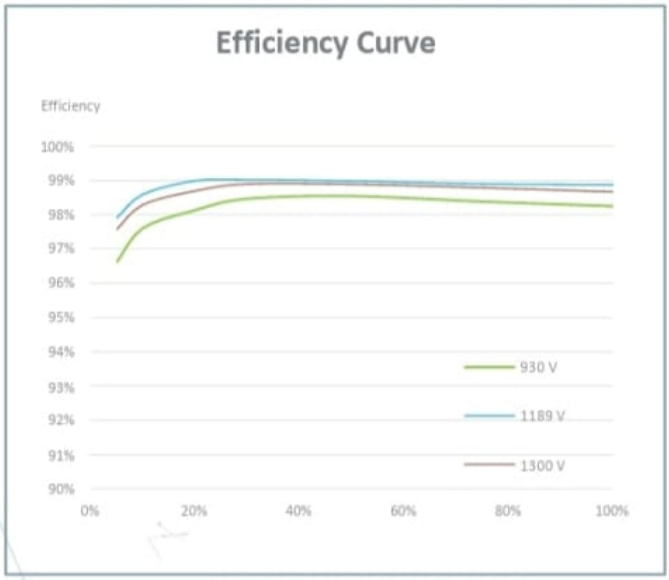

Circuit Diagram

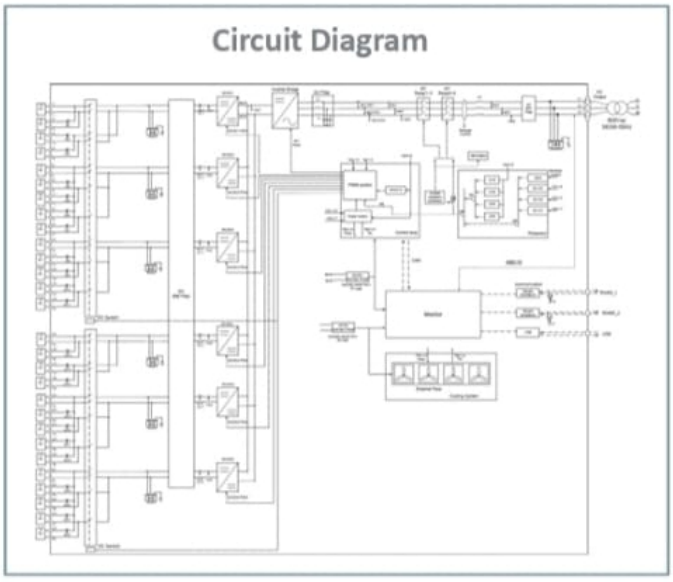

WP-330KTL-H1

Technical Specifications

Efficiency	
Max. Efficiency	≥99.0%
European Efficiency	≥98.8%
Input	
Max. Input Voltage	1,500 V
Number of MPP Trackers	6
Max. Current per MPPT	65 A
Max. Short Circuit Current per MPPT	115 A
Max. PV Inputs per MPPT	4/5/5/4/5/5
Start Voltage	550 V
MPPT Operating Voltage Range	500 V ~ 1,500 V
Nominal Input Voltage	1,080 V
Output	
Nominal AC Active Power	275,000 W*
Max. AC Apparent Power	330,000 VA
Max. AC Active Power (cosϕ=1)	330,000 W
Nominal Output Voltage	800 V, 3W + PE
Rated AC Grid Frequency	50 Hz / 60 Hz
Nominal Output Current	198.5 A*
Max. Output Current	238.2 A
Adjustable Power Factor Range	0.8 LG .... 0.8 LD
Total Harmonic Distortion	< 1%
Protection	
Smart String-Level Disconnector (SSLD)	Yes
Anti-islanding Protection	Yes
AC Overcurrent Protection	Yes
DC Reverse-polarity Protection	Yes
PV-array String Fault Monitoring	Yes
DC Surge Arrester	Type II
AC Surge Arrester	Type II
DC Insulation Resistance Detection	Yes
AC Grounding Fault Protection	Yes
Residual Current Monitoring Unit	Yes
Communication	
Display	LED Indicators, WLAN + APP
USB	Yes
MBUS	Yes
RS485	Yes
General	
Dimensions (W x H x D)	1,048 x 732 x 395 mm
Weight (W/O mounting plate)	≤114 kg
Operating Temperature Range	-30 °C ~ 60 °C
Cooling Method	Smart Air Cooling
Max. Operating Altitude without Derating	4,000 m (13,123 ft.)
Relative Humidity	0 ~ 100%
AC Connector	Waterproof Connector + OT/DT Terminal
Protection Degree	IP66
Topology	Transformerless

*Environmental temperature is 50°C

SERA SOLAR STORAGE PVT. LTD

Contact for Sales
Mr Sateesh Badrajalam
Phone : +91 95005 55224
satheesh.b@serasolar.in

Joveens Building, No. 86, Second Floor,
Fliqzo Spaces, Thiyagi Sivaram Nagar,
Ukkadam ByPass Road, Sungam,
Coimbatore - 641045.